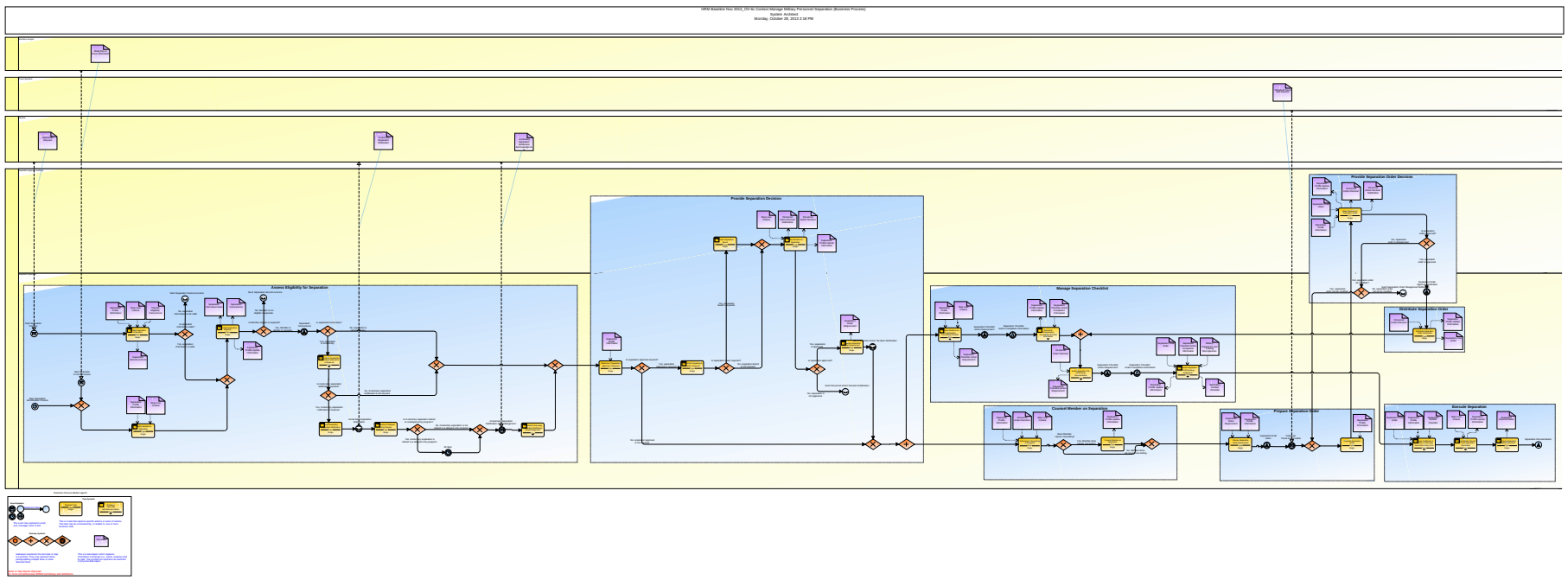
HRM Baseline Nov 2011_OV-6c Conduct Manage Military Personnel Separation (Business Process)
System: AI-Direct
Monday, October 28, 2013 2:18 PM
Assess Eligibility for Separation
Provide Separation Decision
Manage Separation Checklist
Provide Separation Order Decision
Distribute Separation Order
Counsel Member on Separation
Prepare Separation Order
Execute Separation